HL-ART-0612-MONO

Specification-Grade, Direct-View, Monochromatic LED System for Architectural Delineation

PRODUCT SPECIFICATION SHEET

DATE:	
TYPE:	
COMPANY:	
PROJECT:	

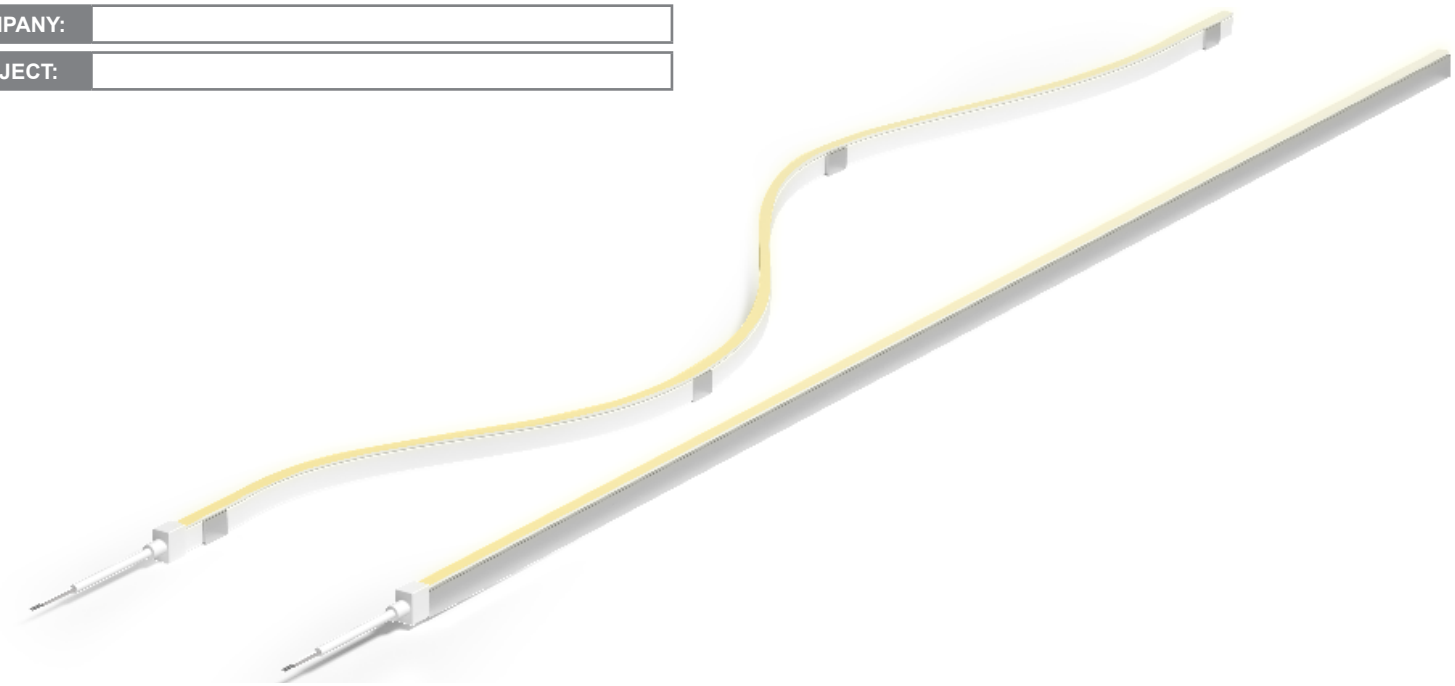

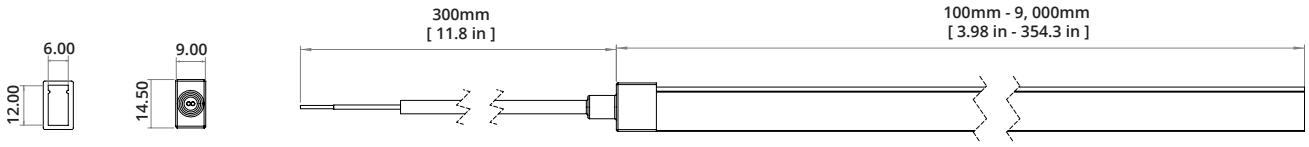

FEATURES

Physical

HL-ART-0612-MONO is a specification-grade, direct-view, fixed or flexible LED system for outdoor and indoor architectural delineation and special lighting effects.

Featuring GVA factory engineered aluminum profiles and mounting options, installable with a maximum horizontal bend radius of 60mm / 2.36” with applicable profile selection.

Electronics are encapsulated by a high-quality Dow silicone, using a fully automated co-extrusion technology.

IP67 protection, superior heat management and resistance from chemicals and UV.

Optics & Electronics

A premium selection of LEDs is used with 3-step micro-binning and CRI 90+ guaranteeing consistency and high quality of light.

Constant current integrated circuit design ensures uniformed light intensity along the entire length of luminaire.

Fully dimmable with specified LED drivers, supporting 0-10V and DALI dimming protocols.

Customization

Cut lengths and terminations are done at GVA factory to ensure IP rating, reliability and to maintain a sleek luminaire form factor by avoiding bulky DIY end caps.

Life Cycle

Long lifetime expectancy of L70B10 > 54,000 hours with five-year limited warranty

HL-ART-0612-MONO

Specification-Grade, Direct-View, Monochromatic LED System for Architectural Delineation

PRODUCT SPECIFICATION SHEET

SPECIFICATION LOGIC: HL-ART-0612-MONO

FAMILY	POWER W/FT	NOMINAL LENGTH[1,2]	CCT[3]	INPUT VOLTAGE	CABLE ENTRY	IP RATING
HL-ART-0612-MONO	**3.1W/FT**	Min length - **100mm** Maximum length - **9,000mm** Increments available - **50mm**	**2200K** **2700K** **3000K** **3500K** **4000K** **5000K** **6500K** **RD** - Red **AM** - Amber **GR** - Green **BL** - Blue **PK** - Pink **YL** - Yellow	**24VDC**	**FF** - Front + Front **SS** - Side + Side **BB** - Bottom + Bottom **FX** - Front + Closed **SX** - Side + Closed **BX** - Bottom + Closed	**IP67**

Order example: HL-ART-0612-MONO-3.1W/FT-3150MM-3000K-24VDC-FF-IP67

PRODUCT CONFIGURATION

1. Standard unit of length is in millimeters. Lengths in inches and feet is calculated from millimeters.
2. See Maximum run lengths table on page 3
3. Due to tolerances of LED binning and production processes, CCT values can vary up to +5%.

Field alterations will void factory warranty

PRODUCT SPECIFICATIONS

		3.1W/ft
Electrical	Power Consumption[1]	10W/m (3.1W/ft)
	Voltage	24VDC (23.5Vmin, 24.5Vmax)
Physical	Minimum Length	100mm
	Height x Width	06mm x 12mm / 0.26” x 0.47” (W x H)
	Body Finish	Premium Silicone Encapsulation, white
	Bend Direction	Horizontal
	Bend Radius	60mm / 2.36"
	Cable Entry Options	Front
	Fixture Connections	IP67
Optical	Light Source	2835 LEDS, 3-step micro binning
	CRI	90+
	Control Protocol	DALI or 0-10V dimmable
	Lumen Output @ 3000K(lm/ft)	133
	Efficacy @ 3000K(lm/W)	41
	Projected Lumen Maintenance	L70B10 > 54,000 hours

1. Due to tolerances of the electronic components, light output and electrical power can vary up to 10%.

HL-ART-0612-MONO

Specification-Grade, Direct-View, Monochromatic LED System for Architectural Delineation

PRODUCT SPECIFICATION SHEET

Temperature Range	Storage Temperature	-25°C / -13°C to 60°F / 140°F
	Max Ambient Temperature	45°C / 113°F
	Min Ambient Temperature	-25°C /-13°F
Certification & Safety	IES Classifications	Class (III) Lumunaire
	Certifications	RoHs, CE, REACH,UL, IP67
		c UL us LISTED, CE, RoHS, REACH
	Environment	Dry, damp or wet locations, 0-100% humidity

MAXIMUM RUN LENGTHS

		Standard
HL-ART-0612-MONO	Power	10W/m (3.1W/ft)
	Max Length	9m/29ft

CABLE ENTRY OPTION EXAMPLES

F - FRONT	S - SIDE	B - BOTTOM
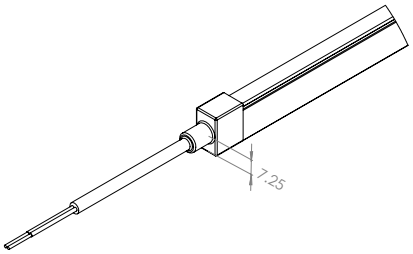	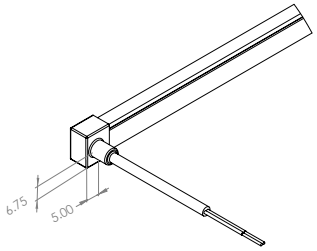	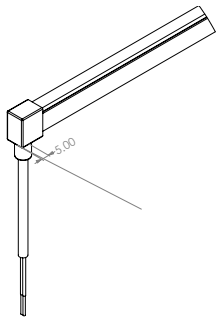

ACCESSORIES

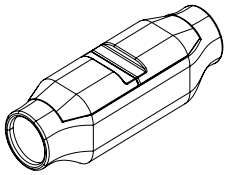	**232219**	**HL-ART,** CONN, TE, WIRE TO WIRE, SERVICE, FEMALE, 4P, 6.2A, 18AWG232219 - CONN, TE, WIRE TO WIRE, SERVICE, FEMALE, 4P, 6.2A, 18AWG

PROFILES AND MOUNTING OPTIONS

FIXED PROFILE

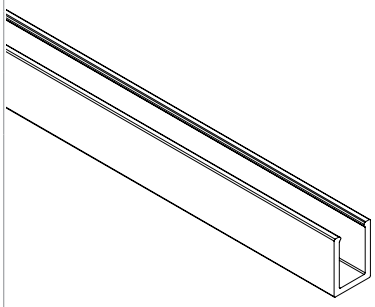

PART NUMBER	DETAILS
0612-FPCM- *MM	**FPCM** - Fixed Profile Clear Matte
0612-FPBM- *MM	**FPBM** - Fixed Profile Black Matte

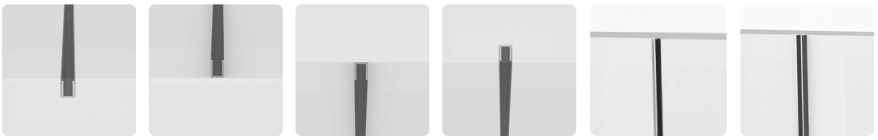

MOUNTING CLIPS[1]

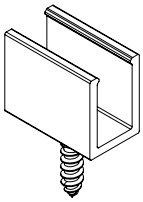

PART NUMBER	DETAILS
0612-MCCM- *MM	**MCCM -** Mounting Clips Clear Matte
0612-MCBM- *MM	**MCBM -** Mounting Clips Black Matte

1. Screw not included

* Insert length of profile selection in millimeters to match luminaire length

WIRING DIAGRAM | NON-DIMMABLE

HL-ART-0612-MONO, TYPICAL SYSTEM DIAGRAM, POWER SUPPLY | IP66 | OUTDOORS

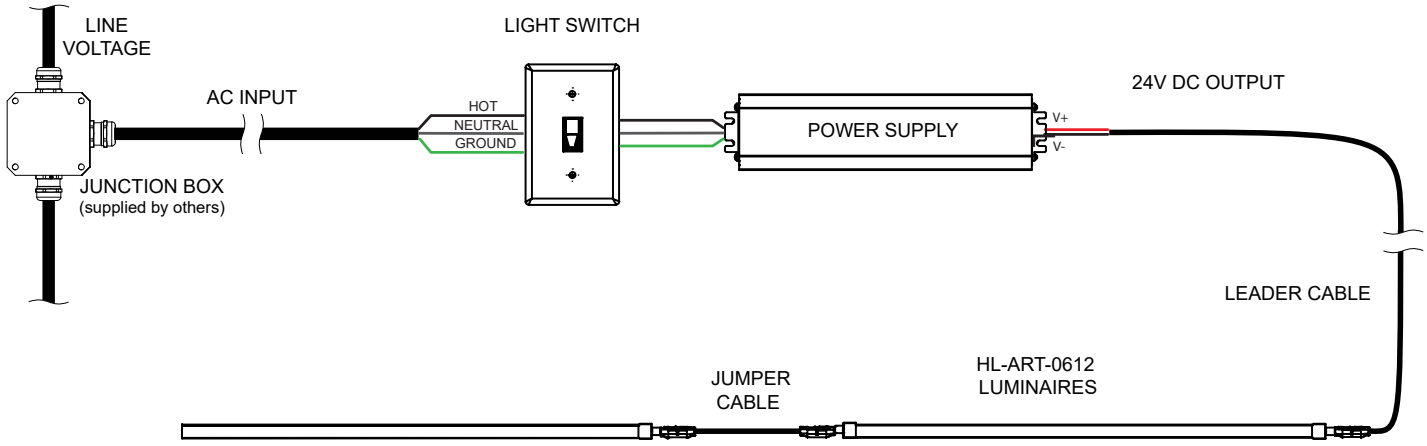

HL-ART-0612-MONO, TYPICAL SYSTEM DIAGRAM, POWER SUPPLY | IP20 | INDOORS

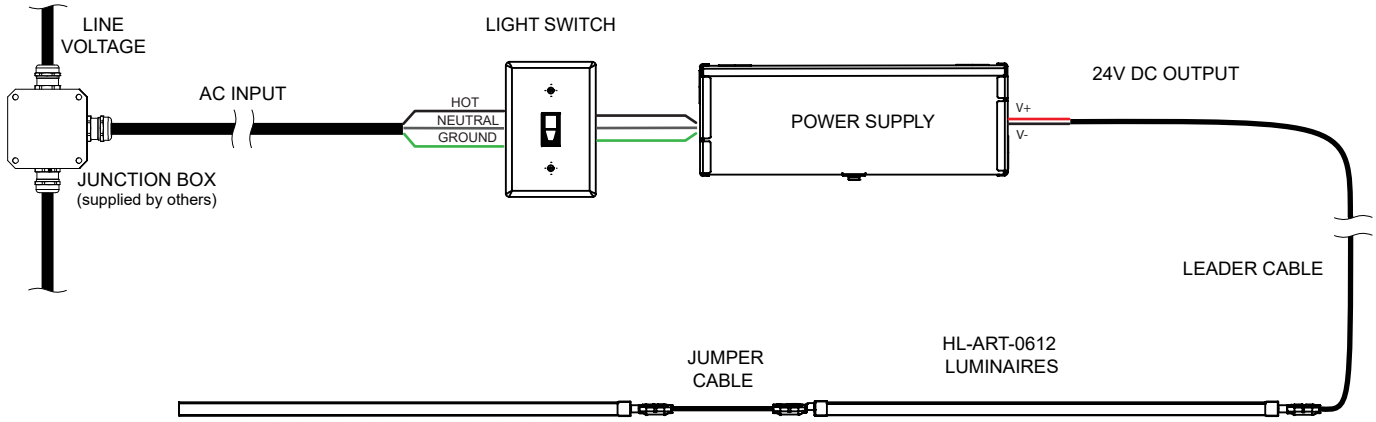

WIRING DIAGRAM | DIMMABLE

HL-ART-0612-MONO, TYPICAL SYSTEM DIAGRAM, DIMMER + DRIVER POWER SUPPLY | IP20 | INDOORS

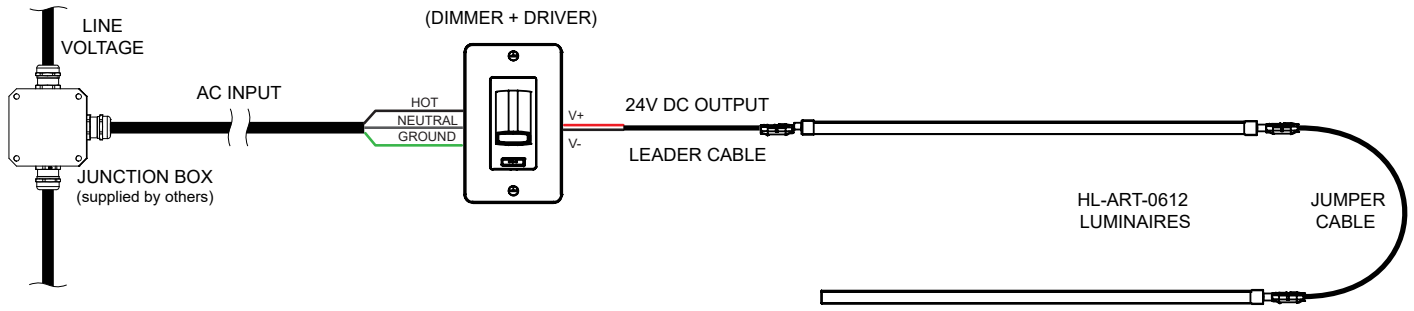

HL-ART-0612-MONO, TYPICAL SYSTEM DIAGRAM, 0-10V DIMMING POWER SUPPLY | IP20 | INDOORS

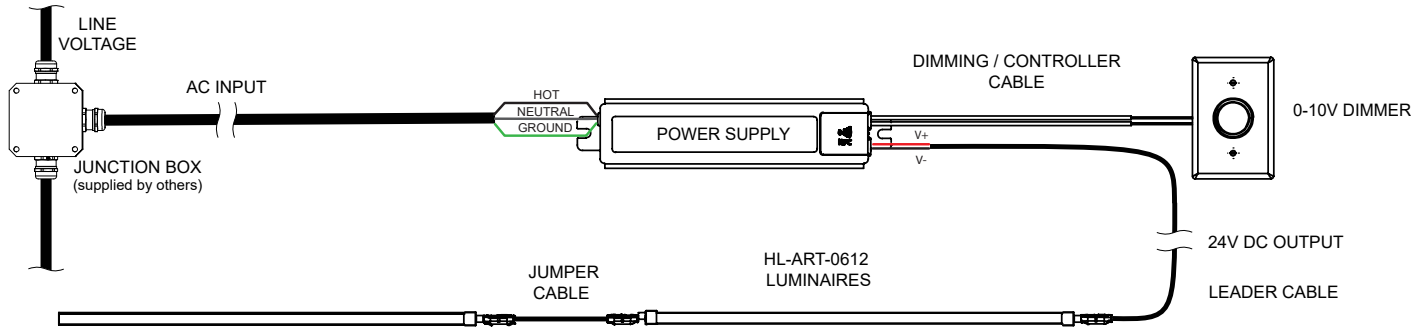

HL-ART-0612-MONO, TYPICAL SYSTEM DIAGRAM, DALI POWER SUPPLY | IP20 | INDOORS

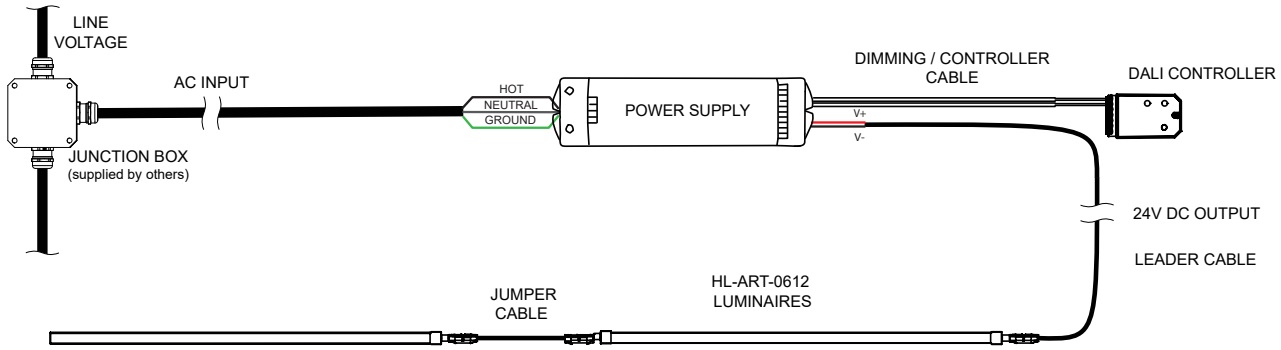

HL-ART-0612-MONO

Specification-Grade, Direct-View, Monochromatic LED System for Architectural Delineation

PRODUCT SPECIFICATION SHEET

DRIVERS AND CONTROLS

IP66 | NON- DIMMING | OUTDOORS

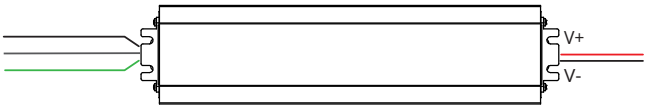

PART NUMBER	DETAILS
210314	**LED DRIVER,** CV, CLASS 2, NON-DIMMABLE, AC/DC, VGM100W-24, 90W, I/P 120VAC 60HZ, 1 O/P, 24VDC/0~3.75A, ALUMINUM CASE, OUTDOOR, IP66

IP20 | NON- DIMMING | INDOORS

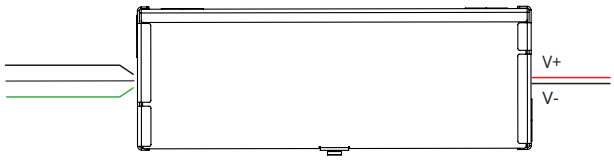

PART NUMBER	DETAILS
210312	**LED DRIVER**, CV, CLASS 2, NON-DIMMABLE, AC/DC, JVLM100W-24, 96W, I/P 120 & 277VAC 47-63HZ, 1 O/P, 24VDC/0~4A, IN A JUNCTION BOX, INDOOR, IP20

IP20 | DIMMING | INDOORS

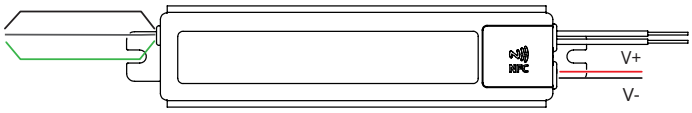

PART NUMBER	DETAILS
210315	**LED DRIVER,** CV, CLASS 2, DIMMABLE, 0-10V, AC/DC, VZM100W-24, 90W, I/P 120 & 277VAC 47-63HZ, 1 O/P, 24VDC/0~3.75A, ALUMINUM CASE, INDOOR, IP20

IP20 | DRIVER + DIMMER | INDOORS

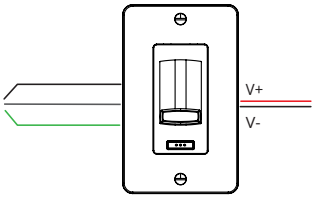

PART NUMBER	DETAILS
210317	**LED DRIVER**, CV, WITH INTEGRATED DIMMER, AC/DC, VSW100U-24-ERP, 100W, I/P 120VAC 60HZ, 1 O/P, 24VDC/0~4.2A, FOR SINGLE GANG BOX MOUNT, INDOOR, IP20

IP20 | DALI | INDOORS

PART NUMBER	DETAILS
210323	**LED DRIVER,** CV, CLASS 2, DIMMABLE, DALI, AC-DC, SRP-2305-24-96W-CVF, 96W, INPUT 120 & 277VAC 50-60HZ, 1 OUTPUT, 24VDC, 0~4A, PLASTIC CASE, IP20