ECO FLEX SLIM 180 - SL 2700K

SPECIFICATION SHEET

IP20 | IP54 | POWER SUPPLIES | CABLES | PROFILES | CONNECTORS | PCB COLOUR | 14.4 W/m

1120 Lm/m | CE | RoHS COMPLIANT

PRODUCT SPECIFICATION

Dimension	L5000/W5mm
PCB increment	Power connection and cut point every 33.33mm
LED pitch	5.60mm
Chip	Epistar
Beam angle	120°
Colours	White
Bin/step	3 Step MacAdam ellipse
CRI	92.3
Lifetime	50000hrs @45°
Operating temp.	0 - 50°C
IP rating	IP20/54
Mounting	3M VHB backing tape
Minimum bend radius	10mm
Connection	Hardwire tails or male/female connectors
Control	0-10V/1-10V/DMX/DALI

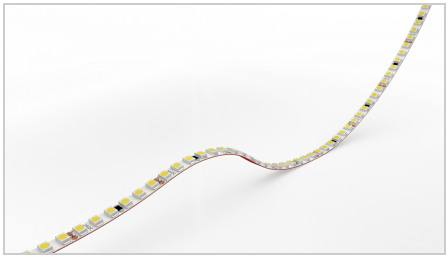

PERFORMANCE DATA (for 1000mm)

Power consumption	14.4W
Supply voltage	24V DC
Supply current	0.6A
Luminous flux	1120Lm/M

TECHNICAL DRAWING

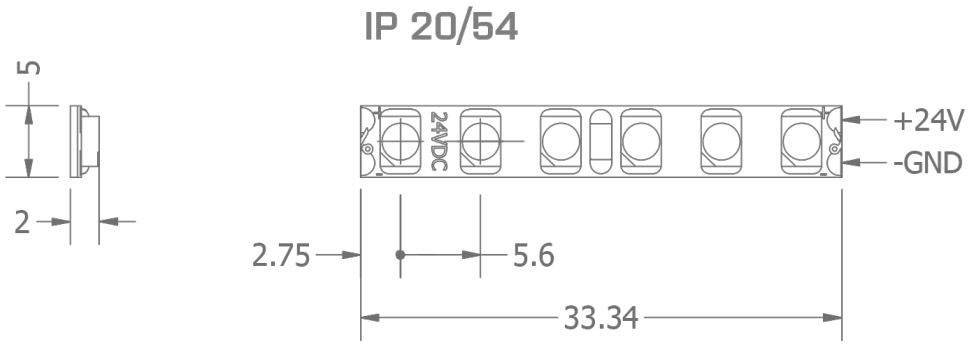

+44 (0) 203 137 7305
info@led-flex.co.uk
www.led-flex.co.uk

ECO FLEX SLIM 180 - SL 2700K

PRODUCT DETAILS

Product name	ECO FLEX SLIM 180 SL
Stated output	1120lm per metre
Description	Flexible LED Tape, 2700K, 24V, 14.4W/m
Quantity/length of product tested	1 x 1000mm
Bin tolerance/#. MacAdams ellipse of chip	3 Step MacAdam ellipse

ELECTRICAL CHARACTERISTICS

Input Voltage (V DC)	24
Input power (W DC)	14.4
Input Current (mA DC)	600mA

LIGHT OUTPUT

Total light output (Lumens)	1120
Luminaire efficacy (lm/W)	77.78
Beam angle	120°

COLOUR CHARACTERISTICS

Correlated colour temperature (CCT)	2732K
Colour rendering index (CRI, Ra)	92.3
Chromaticity coordinates (CIE 1931 - x,y)	0.4561, 0.4078

COLOUR RENDERING INDEX

R1	R2	R3	R4	R5	R6	R7	R8	R9	R10	R11	R12	R13	R14	R15
93	97	98	91	92	97	90	80	58	93	92	83	94	100	88

CHROMATICITY DIAGRAM

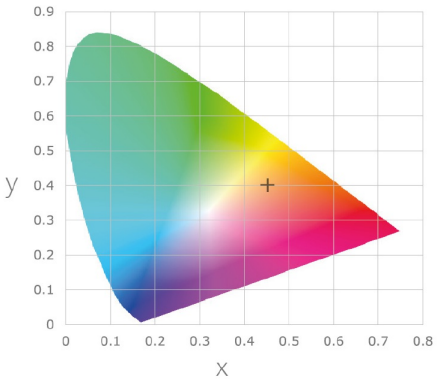

SPECTRAL RADIANT FLUX VERSUS WAVELENGTH

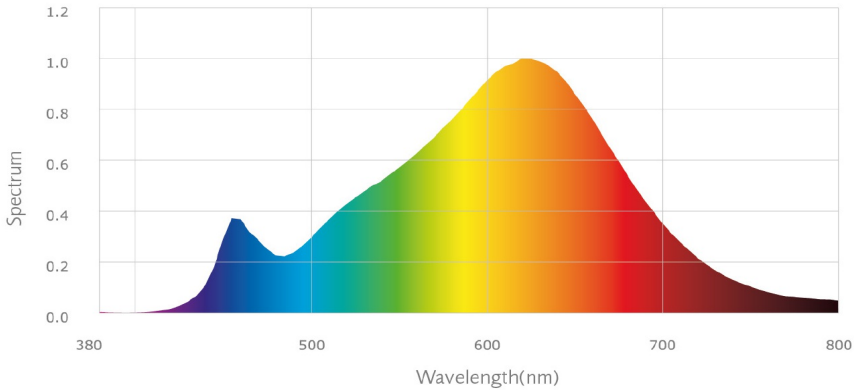

+44 (0) 203 137 7305
info@led-flex.co.uk
www.led-flex.co.uk